■Introduction of NerveNet+LoRa to Universiti Sains Malaysia (USM)

NerveNet+LoRa technology was introduced and demonstrated at USM Engineering Campus (Malay Peninsula side) and Penang Campus (Penang Island) on March 25 and 26, 2019. The demonstration was carried out by the National Electronics and Computer Technology Center (NECTEC) in Thailand.

March 25: Prof. Widad Ismail (USM), who is the leader of the ASEAN IVO project "Smart Aquaculture Quality Monitoring System with Internet of Things" that started in 2018, and its members participated in USM Engineering Campus. March 26: At the Computer Science Department of USM Penang Campus, a total of about 12 people from Computer Science Department, Electrical Engineering Department, and mathematical engineering Department participated, and specialized fields were smart city, transportation, cyber security, information retrieval, tourism, Various members such as database, wireless, optimization, natural language participated.

Deputy Director Asai of NICT Asia Center gave an overview of NerveNet+LoRa technology, and two NECTEC engineers who had mastered the technology gave a demonstration of the technology.

The technology called NerveNet+LoRa uses the information synchronization function, which is one of the functions of conventional NerveNet, and applies LoRa, which is being used worldwide, to the part that transmits information between devices. In the above, we adopted a formula that wirelessly diffuses information without specifying the destination. As a result, information can be propagated to other devices one after another. NECTEC engineers connected a monitor to each of the three sets of equipment. One set consisted of a demonstration system that was connected to a sensor board developed by NECTEC (temperature, humidity, etc.). The system configuration, information transmission/reception processing flow, information transmission/reception intervals by LoRa, data operation on the control PC, etc. were explained. The demo showed the information propagation between the two devices and the display of response data to the sensor request for sensor information.

NerveNet+LoRa introduction by asai

Demo equipment

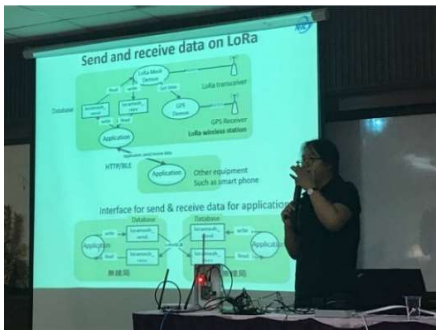

Demo by NECTEC Ms.Tanika

以上

Introduction of NerveNet+LoRa

Presented by NICT Asia Center

Nobuyuki Asai (Non Asia Asai)

< NICT Researcher >

Yasunori Owada : yowada@nict go jp

Goshi Sato : sato_g@nict.go.jp

NerveNet concept

Japan has lots experience to suffer the natural disaster and sometime network infrastructure is damaged such as no telephone, no mobile and no internet.

Robust Network	Configure mesh topological network.
Quick recovery adhoc Network	Potable and connect live network.

NerveNet is designed as Layer 2 switch to enable to configure mesh topological network using VLAN mechanism and attach many type of transmission.
And NerveNet is designed as running on the Linux operating system to enable to configure and set up quickly as adhoc network.

NerveNet concept

Mesh topological network.

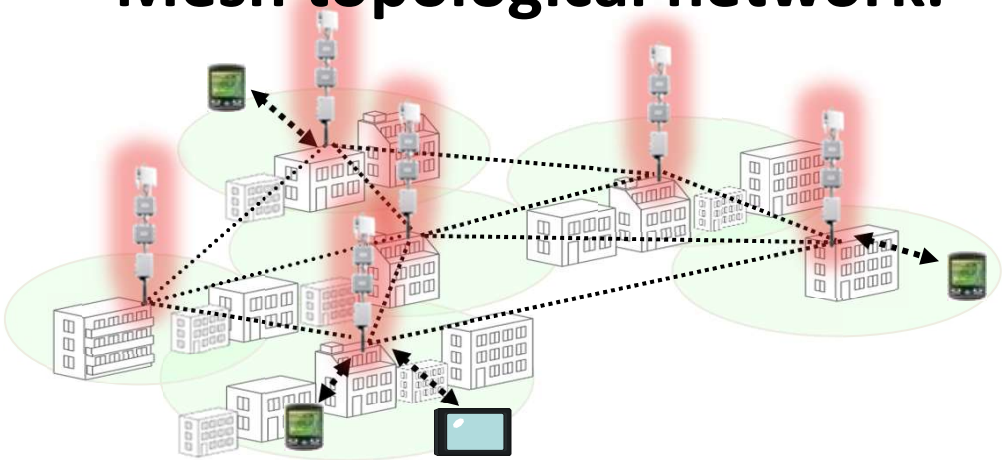

Potable and quick recovery.

< Proven fact of Kumamoto earthquake in 2016 >

14/Apr 21:26 Kumamoto earthquakes occurred.
16/Apr 1:25Nand biggest occurred.
16/Apr 15:00 NICT decision to dispatch researchers and the network equipment
18/Apr 20:05 Arrive at Takamori town in Kumamoto.
19/Apr 13:30 1 access point was established for the public administration
at the disaster countermeasures headquarters (General Administration Division).
19/Apr 14:30 another AP for the residents near the entrance of the town office.
20/Apr 20:30 an internet satellite circuit via Kashima Space Technology Center was provided.
As a result, both networks recorded a maximum of 18 Mbps.

NerveNet Spec

High-Performance L2 Switch Type

NerveNet NPS-108AC (Hirakawa Hewtech)

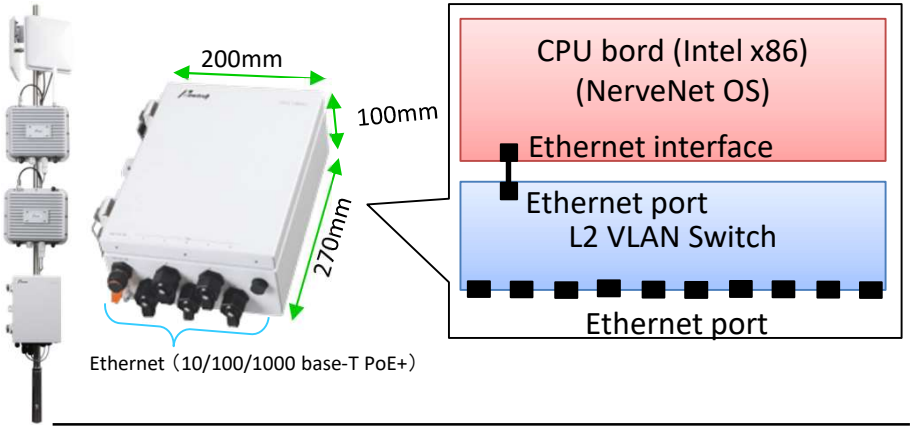

Type	NPS-108AC
Network Interface	IEEE 802.3at(PoE+) Ethernet (10/100/1000 base-T) 5 ports
Operation Temp./Humidity	-10 ~ 50℃ / 20 ~ 85%
Power input/consumption	DC12V / 25W average (100W max)
Protection class	IP65
Weight	5.5kg
Other interfaces	Serial ATA, PCI-E, USB, SD, Serial
Storage	2.5 inch SSD 8GB (default)
OS	Debian Linux 8 (NerveNet OS)
RAM	4GB
CPU	Intel Atom

All-Software Type

Raspberry Pi 3 (RS Components)

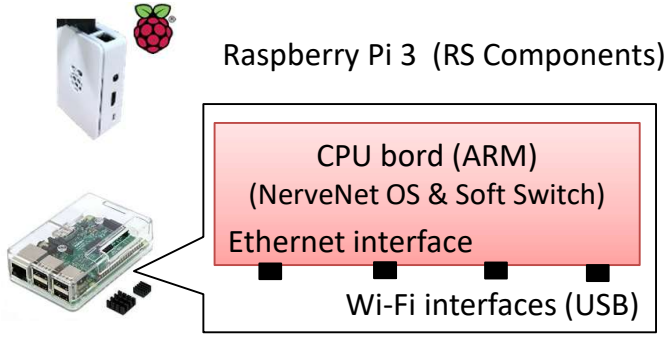

※No L2 VLAN Switch hardware

Type	Raspberry Pi 3 model B
Network Interface	Ethernet (10/100/1000 base-T) 1 port, Embedded Wi-Fi (11gn)
Operation Temp.	0 ~ 70℃
Power input/consumption	DC5V / 6.5W average (12.5W max)
Weight	120g
Other interfaces	USB2.0 x4 , micro SD, GPIO
Storage	2.5 inch SSD 8GB (default)
OS	Debian Linux 8 (NerveNet OS)
RAM	1GB
CPU Broadcom BCM2837	Quad Core 1.2GHz

Case study

Measures against natural disasters

Japan has high risk of natural disaster

Earthquake, tunami	The Great Hanshin-Awaji Earthquake of 1995
	the 2011 Tōhoku earthquake and tsunami
	The 2016 Kumamoto Earthquake
Heavy rain, typhoon flood & destruction	2017 : Northern Kyushu heavy rain
	2015 : Kanto · Tohoku heavy rain
	2012 : Kyushu northern heavy rain
	2011 : Heavy rain caused by Typhoon 12
	:

Medical relief activities at the time of large scale disaster

Wide area disaster Emergency Medical Information System (EMIS)
Information sharing cloud of medical institution, government / administration and related institutions

1. Facility information such as hospitals at the time of disaster
2. DMAT (Disaster Medical Assistance Team) information
3. Emergency notification to the Ministry of Health, Labor and Welfare, etc.
4. Basic information such as the number of beds, doctors, and nurses

Case study

Demand for network in disasters

Intra-area/Wide area transport & ambulance management

It is important to grasp resources such as transport vehicles (ambulances) and doctor helicopters managed by each medical institution.

Currently, emergency vehicle management is performed using a mobile phone network, but there is a risk that management of the emergency vehicle can not be performed if the mobile phone network can not be used.

Demand for Emergency Vehicle Management with Private Network Independent of Mobile Phone Network.

Case study

Apply NerveNet+LoRa to Vehicle Management

Establish connection between disaster base hospitals by an independent private network, and share information grasp of vehicle information by NerveNet + LoRa private network with distributed sharing Database.
Vehicle information such as ambulance location received at any hospital is shared among hospitals.
→ **Share information such as patient transport instructions and the hospital's acceptance system for patients.**

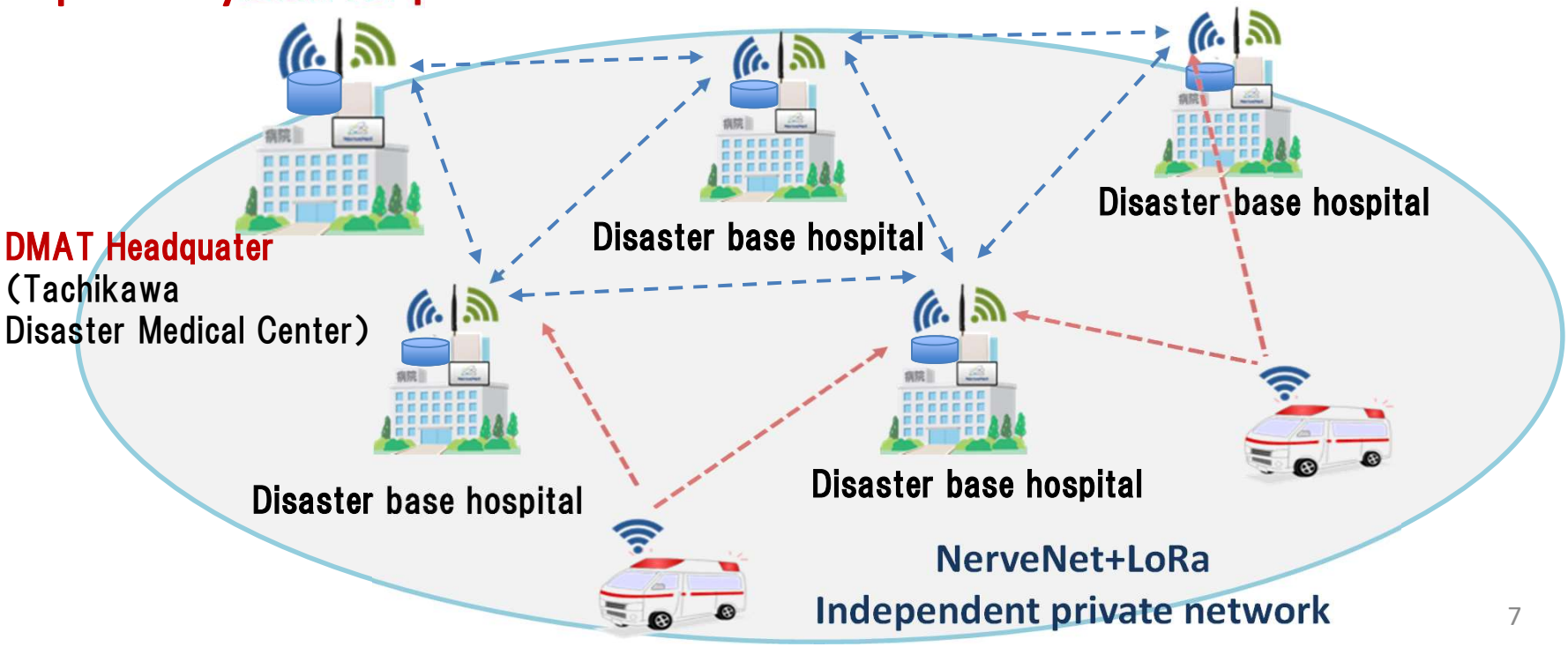

In-vehicle node

Raspberry Pi3 Model B
LoRa module
Bluetooth LE
Wi-Fi
GPS receiver, Battery

Hospital Rooftop nodes

Intel NUC、GPS receiver
LoRa module ×2
（one for In-vehicle node,
another is for hospital）
Wi-Fi

BLE

Ethernet/Wi-Fi

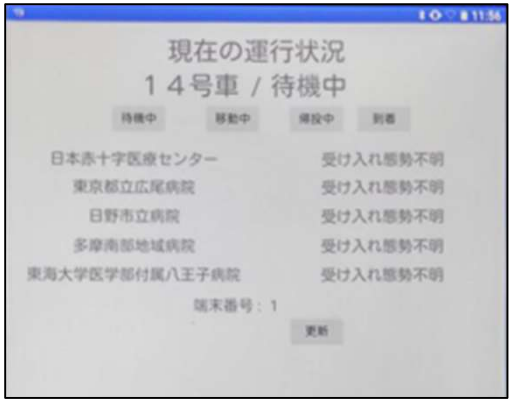

Display notification of hospital status to tablet
Send vehicle status (in transit, standby etc) from tablet

Display vehicle position, route on map

Case study

LoRa module

Supplier is RF Link
LoRa module : RM-92A

Item	Spec
Conformed technical standard	ARIB STD-T108, 920 MHz band specified low power radio station, IEEE802.15.4g adaption
Transmission output	+13dbm
Modulation method	LoRa/FSK/GFSK
Maximum transfer rate	292.97bps～37500bps (Lora mode) 50kbps～100kbps(FSK/GFSK mode)
Maximum reception sensitivity	-137dBm
Antenna gain	3dBi
Interface	Serial : 115200bps Connector : USB

For Application development

No need to study complicated LoRa setting

NerveNet provide LoRa Mesh demon and when user configure the LoRa wireless node, user set the parameter onto LoRa Mesh demon.
It is not necessary to study in detail interface of LoRa.
Node & network topology and configuration will be automitaclly done by NerveNet.

No need to study complicated communication method

NerveNet provide the API for application program.
When application program receive/send data from/to another node, application program access to database only. All receive/send data is controlled by Nervenet and put receive/send data into database.

Distributed synchronized database for application

NerveNet provide the database on each node with synchronization of data with other nodes. Application program can be develop on each node as stand alone and it is possible to reduce the communication with other node.

terima kasih

Demo of NerveNet+LoRa

Thanika Duangtanoo
NECTEC

Demo 1

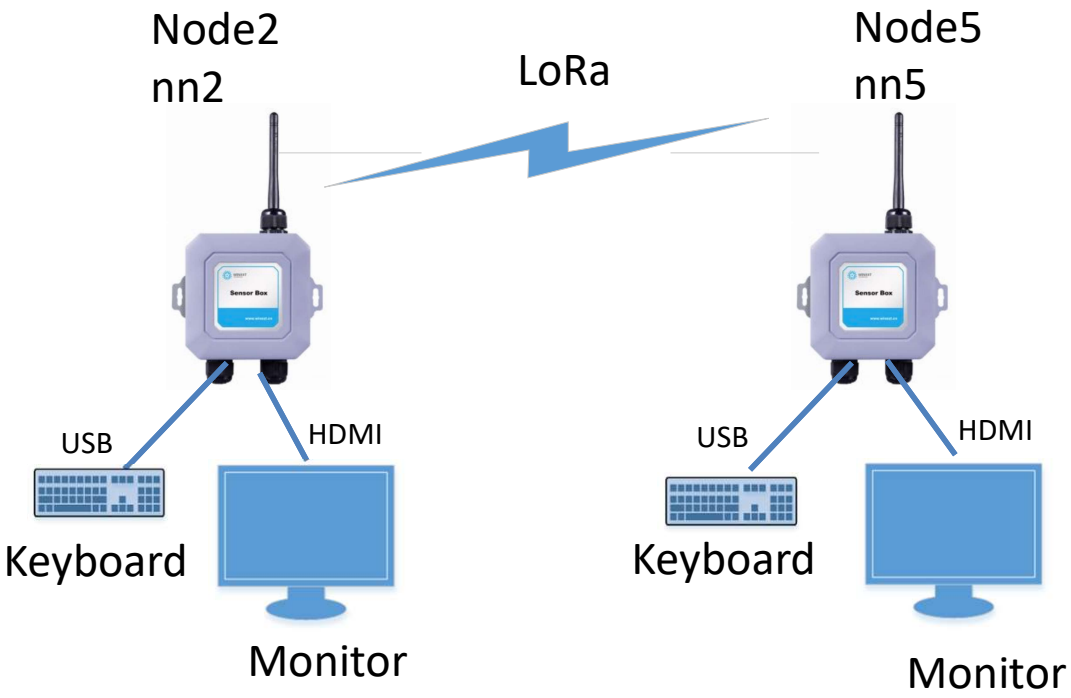

key text in format “destination message” + ENTER
i.e. nn5 hello world [ENTER]

Display message in text data to other monitor

Demo 2

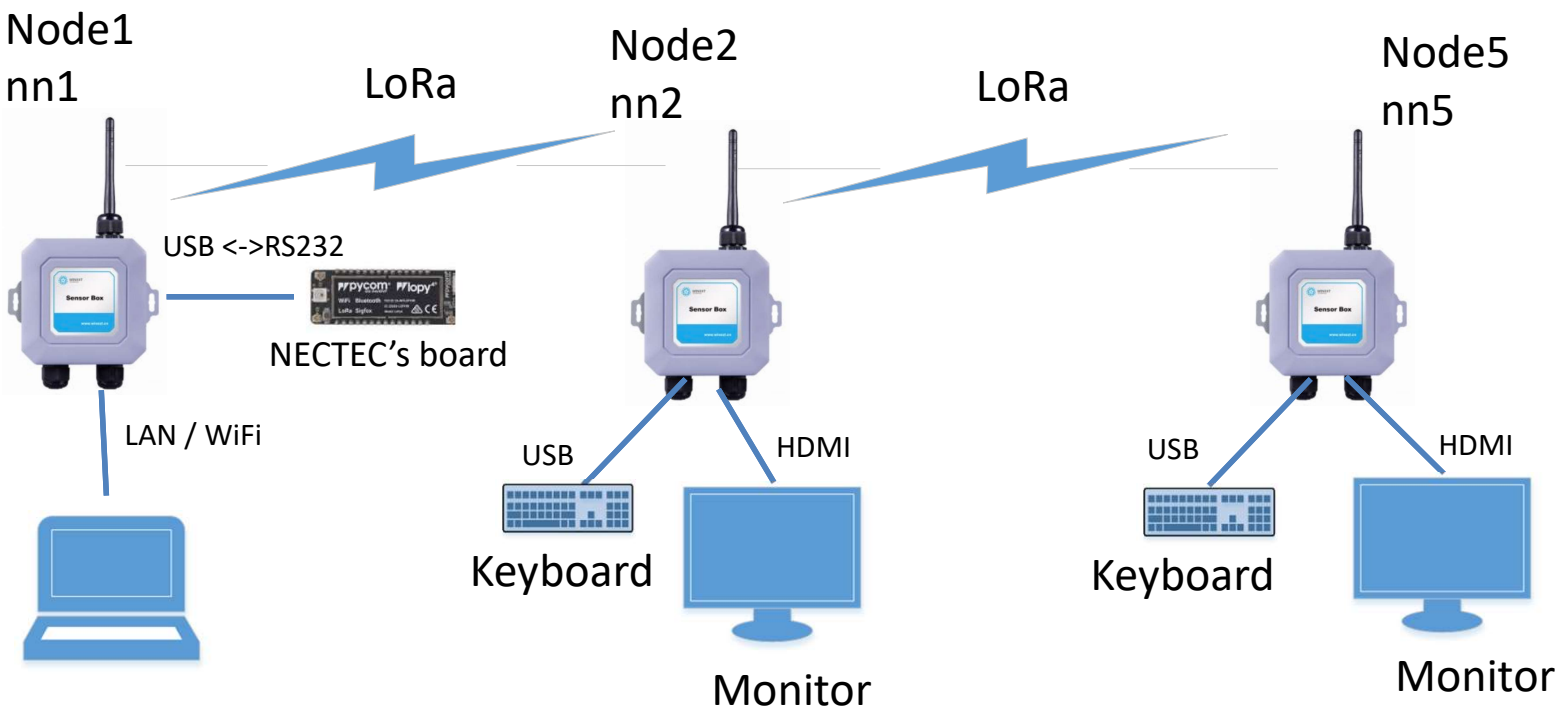

key text in format "destination message" + ENTER
i.e. nn1 $ spi get 0 [ENTER]

Node1 will send "$ spi get 0" to NECTEC's board.
The board will reply sensor values

Information sharing on LoRa (Flooding)

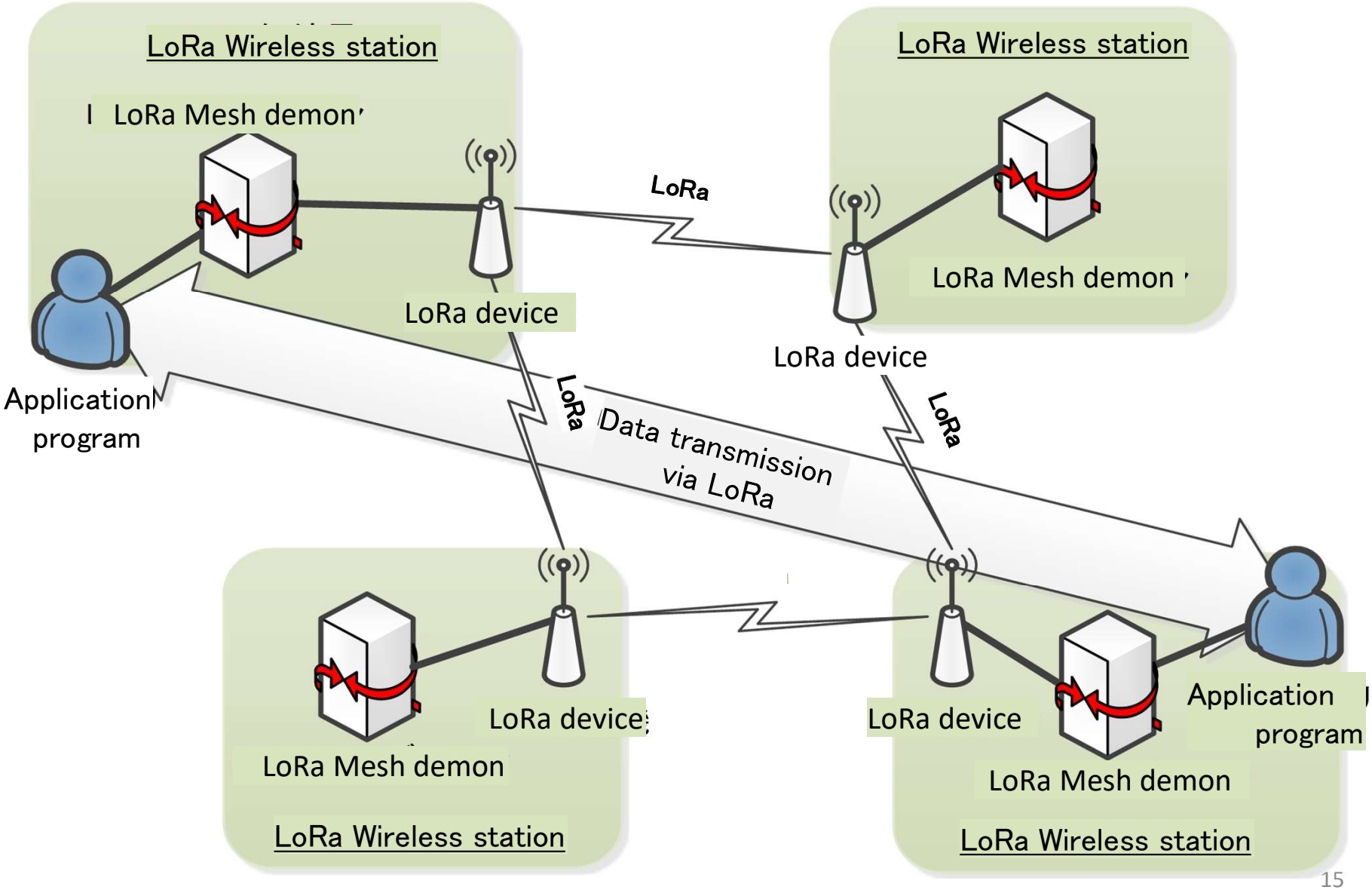

Send and receive data on LoRa

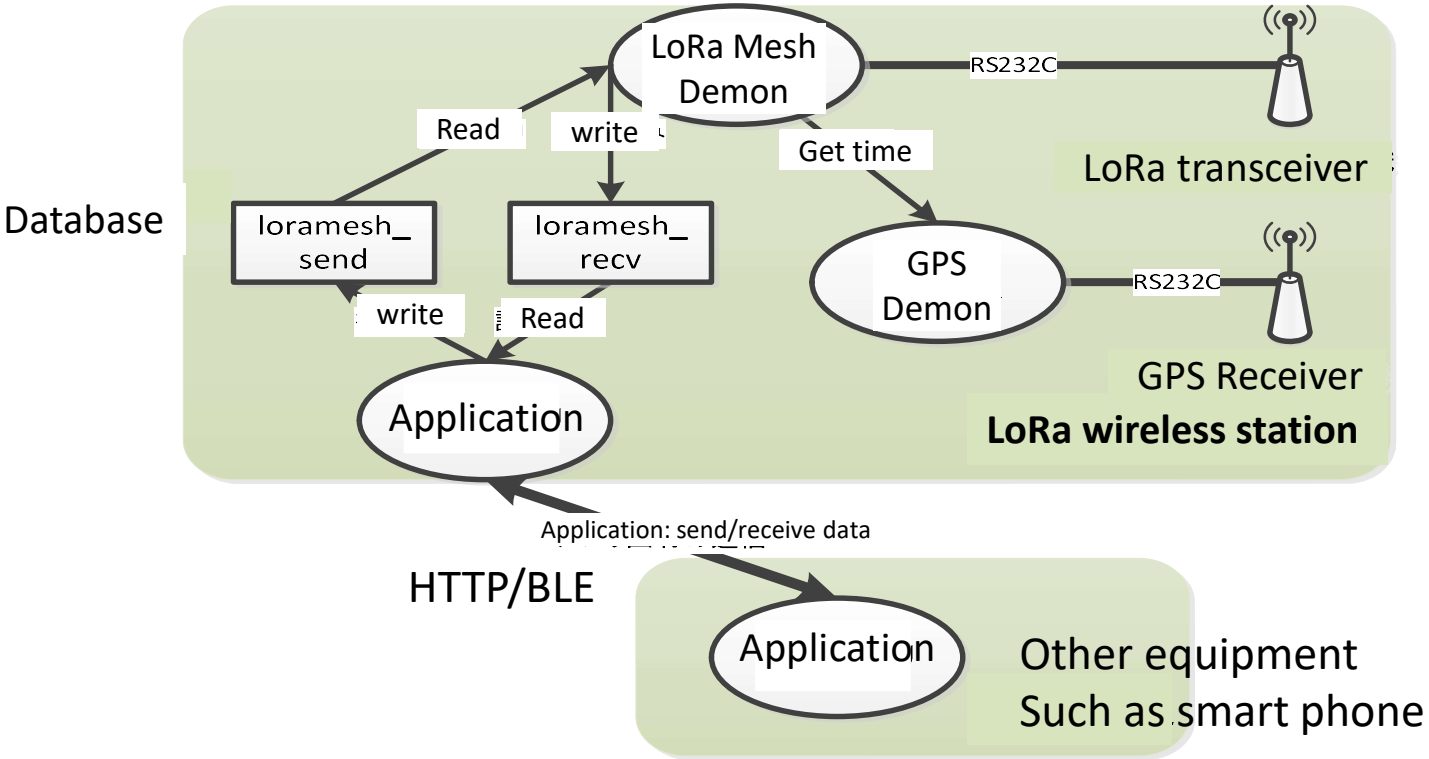

Interface for send & receive data for application

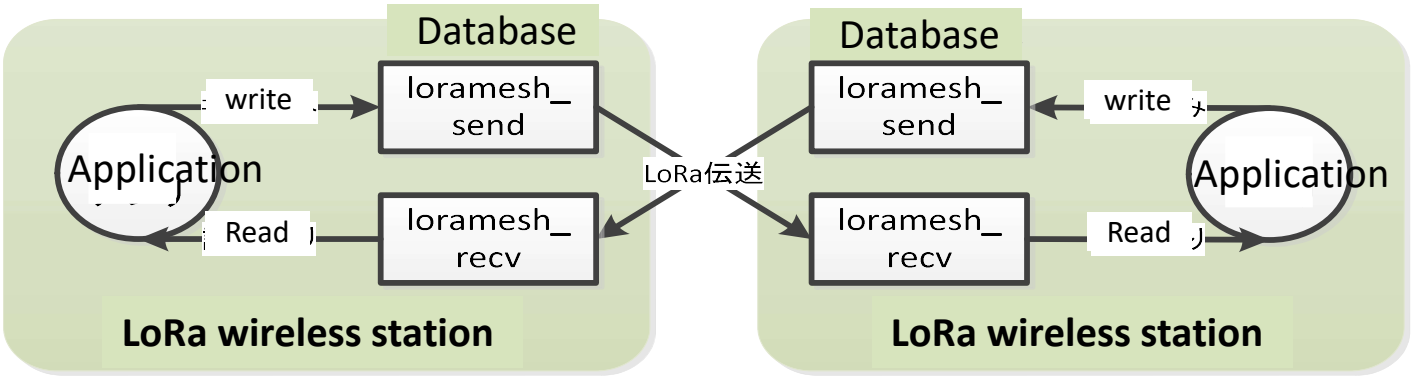

Mechanism of adjacent node discovery

(communication between rooftop nodes)

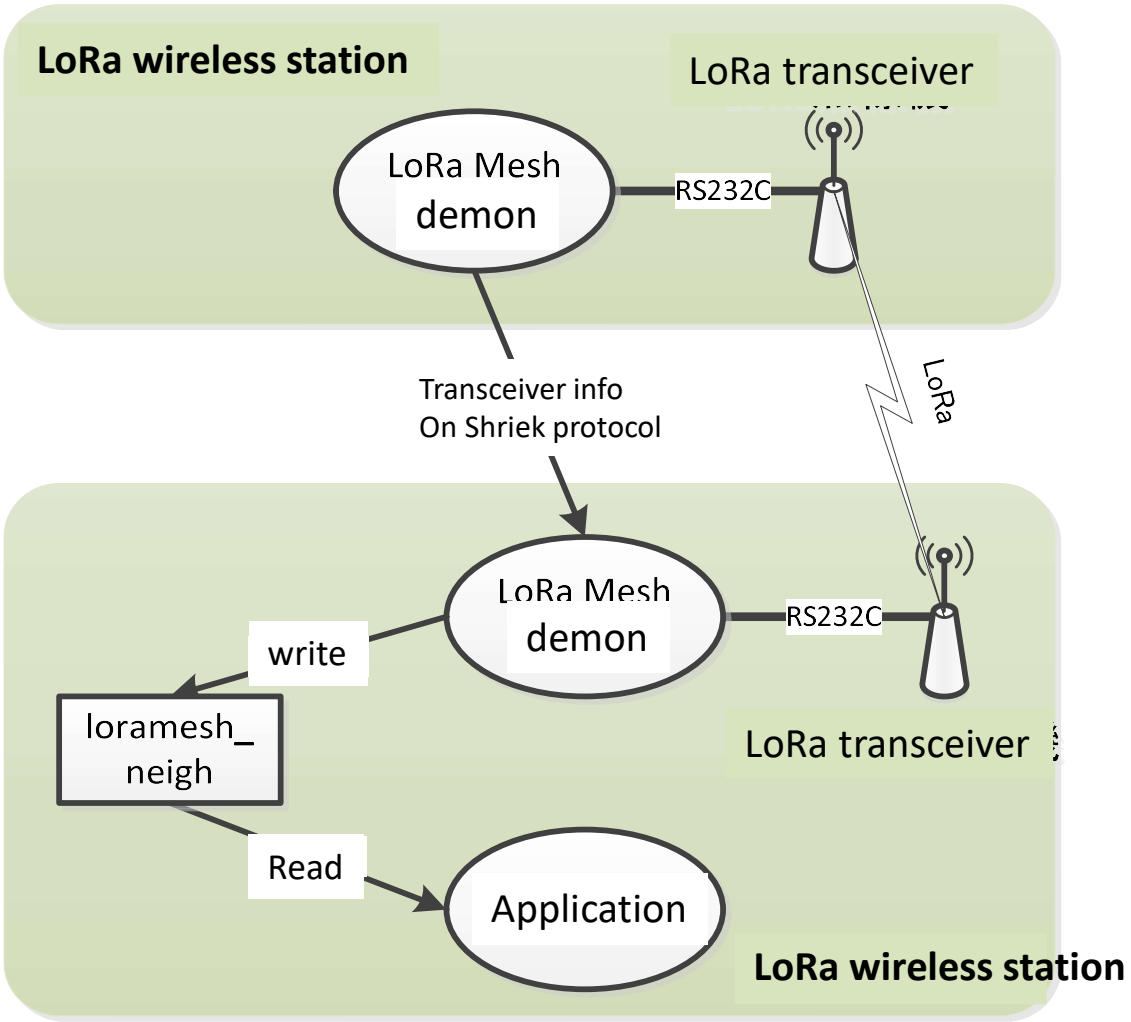

Understand the topology of the network by grasping adjacent nodes and sharing it among node

→ No need to define network topology

Use for efficiency at the time of flooding

Transmission Slot allocation

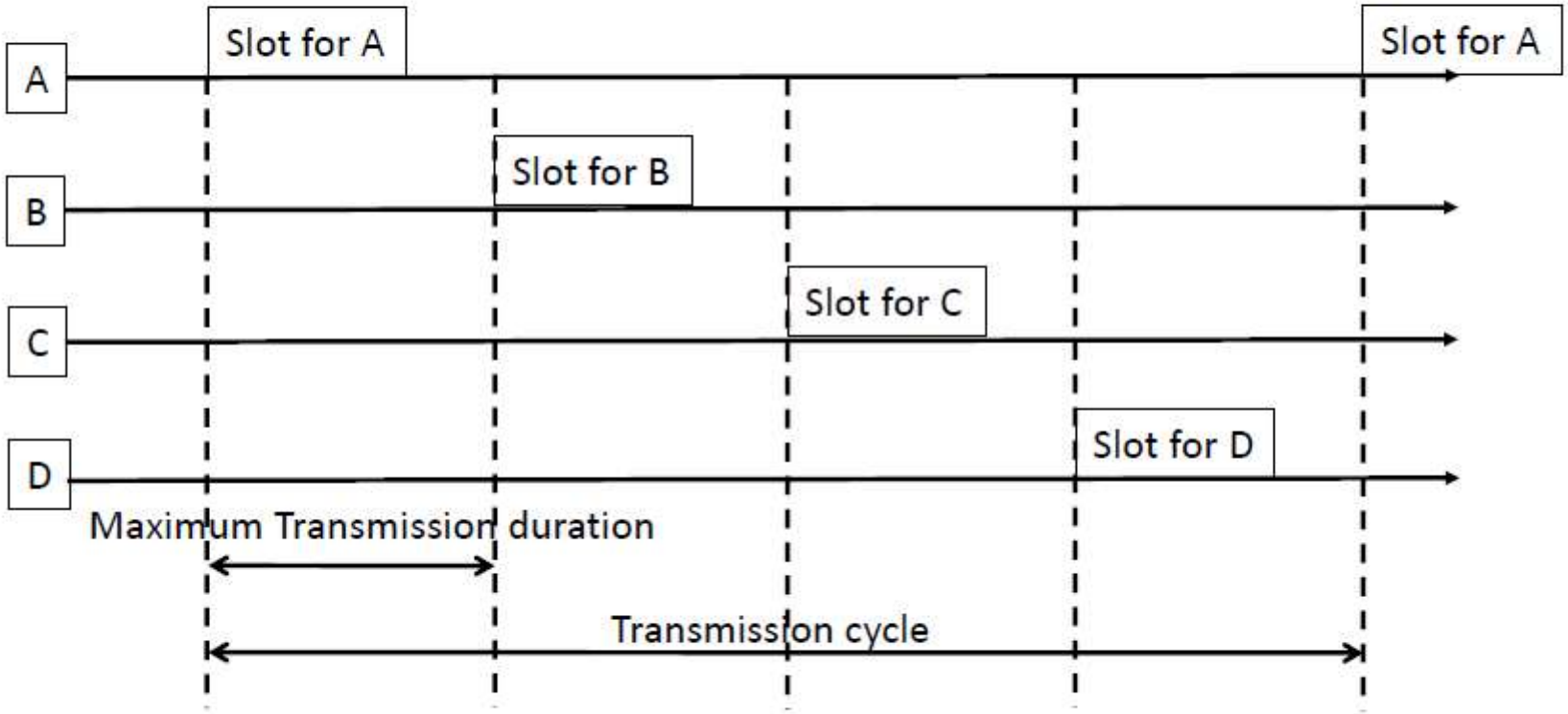

Time synchronization is done by GPS

terima kasih